SPECIFICATIONS AND INSTALLATION INSTRUCTIONS FOR THE FRE-FLO™ WATER CONDITIONER H100-075

H100-075 FRE-FLO SPECIFICATIONS

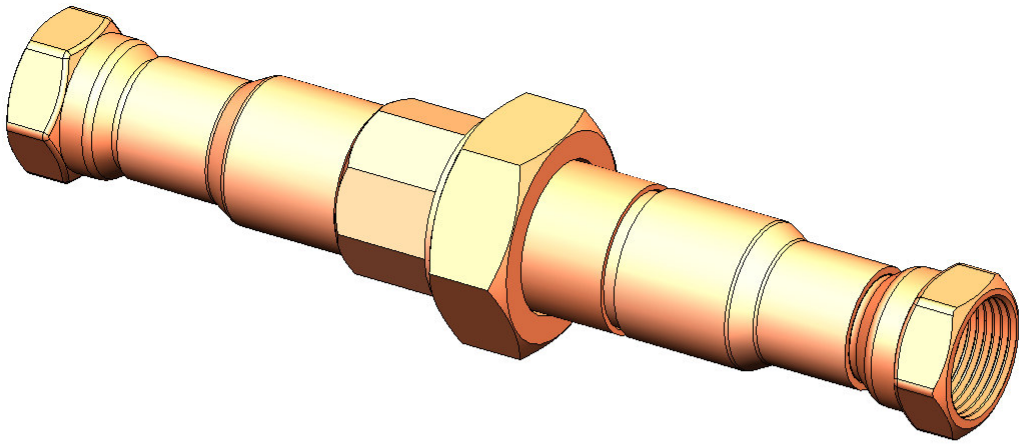

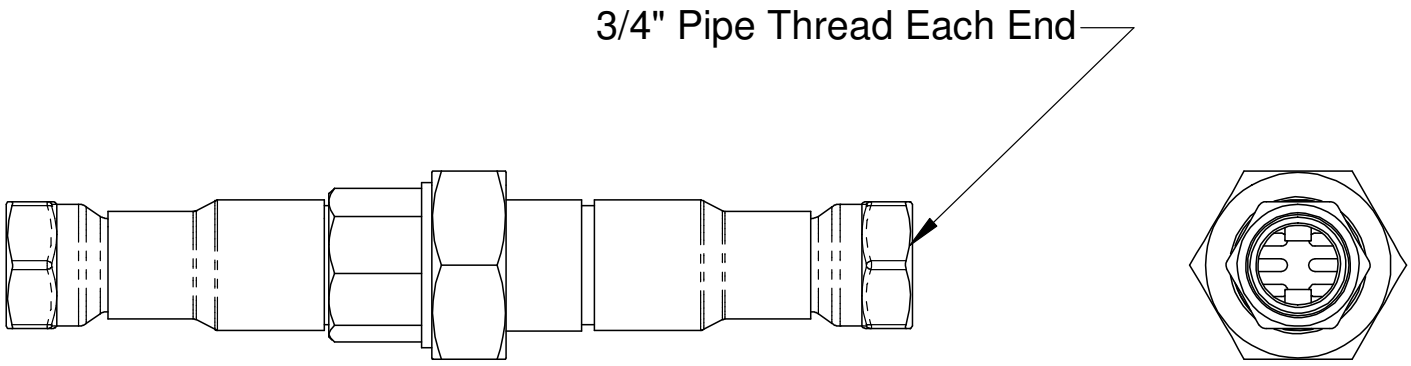

WEIGHT: 2.5 LBS
WATER FLOW RATE: 0.4 - 2.3 GPM
HOUSING MATERIAL: COPPER

INSTALLATION INSTRUCTIONS

Welcome to the FRE-FLO™ Whole Home Scale Prevention Unit

Installation should always be made by a licensed and bonded plumber, or contractor. The FRE-FLO™ unit is designed to be non-directional – *there is no preferred flow direction*. When the FRE-FLO™ is installed in a pressurized piping system, the unit can be installed either horizontally or vertically with equally good results.

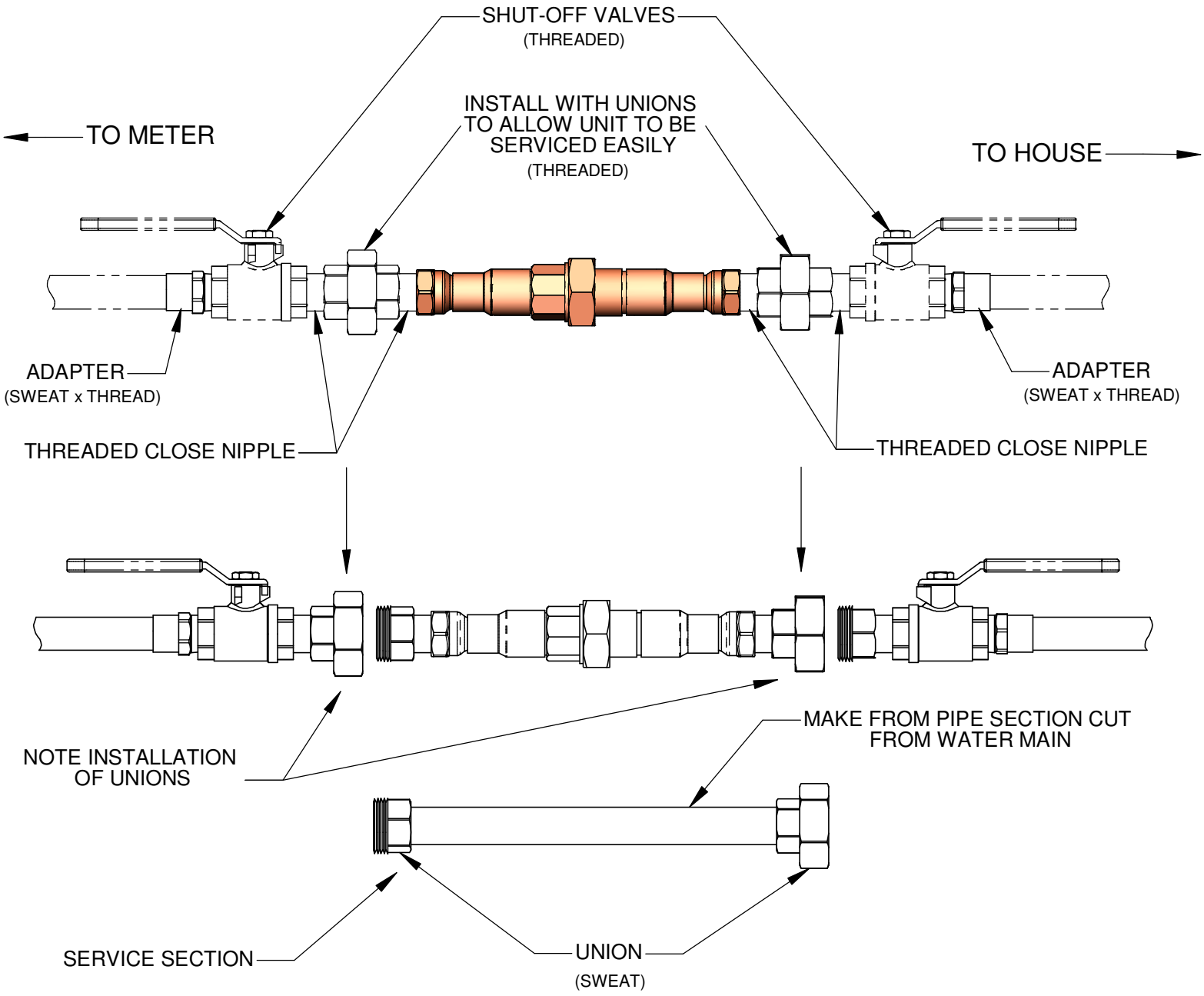

Figure 1

See Figure 1

Before installation, please read all steps.

1. During the FRE-FLO™ installation, it is vital to simply use great caution and common sense to not drop the FRE-FLO™, as the metals are brittle and can shatter. Install the FRE-FLO™ into a section of piping that is straight, without kinks, bends, or heavy corrosion between the water meter and house. Install FRE-FLO™ unit with two unions (one on each end) so that it can be very easily serviced. It is recommended to install one shut-off valve at each end of the FRE-FLO™ unit for ease of servicing.
2. Before cutting the pipe, be sure to turn off the water at the water meter or main supply line. Open a cold water faucet to allow the water supply to relieve any pressure in the water system. Measure section of pipe to be removed and retain the removed section to make the service section.
3. Use Teflon pipe tape on all threaded fittings. Pipe gunk is <u>not</u> recommended. If a threaded joint leaks, tighten gradually with a wrench until leak stops.
4. It is recommended to make a service section the same length as the FRE-FLO™ and with one union (placing one half of the union on each end of the service section) to allow ease of servicing. Note the installation of the two unions on the FRE-FLO™ unit allows you to use only one union for the service section.
5. After installation(with a cold water faucet open), open the water supply shut-off valve slowly to allow any air in the system to escape. Wait 30 seconds or until all the air has exited the piping system and then open the water supply valve all the way and let the water run for a few minutes.
6. The water is now conditioned and the FRE-FLO™ will immediately begin removing scale from the internal portion of the water supply piping. If there is an existing heavy scale build-up, the incoming water may be cloudy for a few days, as the existing scale is washed away. This is a normal occurrence. Initially, it may also be necessary to increase the cleaning cycles on all screened water outlets as the scale is being removed. During the initial cleanout of the system the water maybe cloudy. It is expected that as the line is cleaned out, the need to clean these screens/aerators will be reduced.

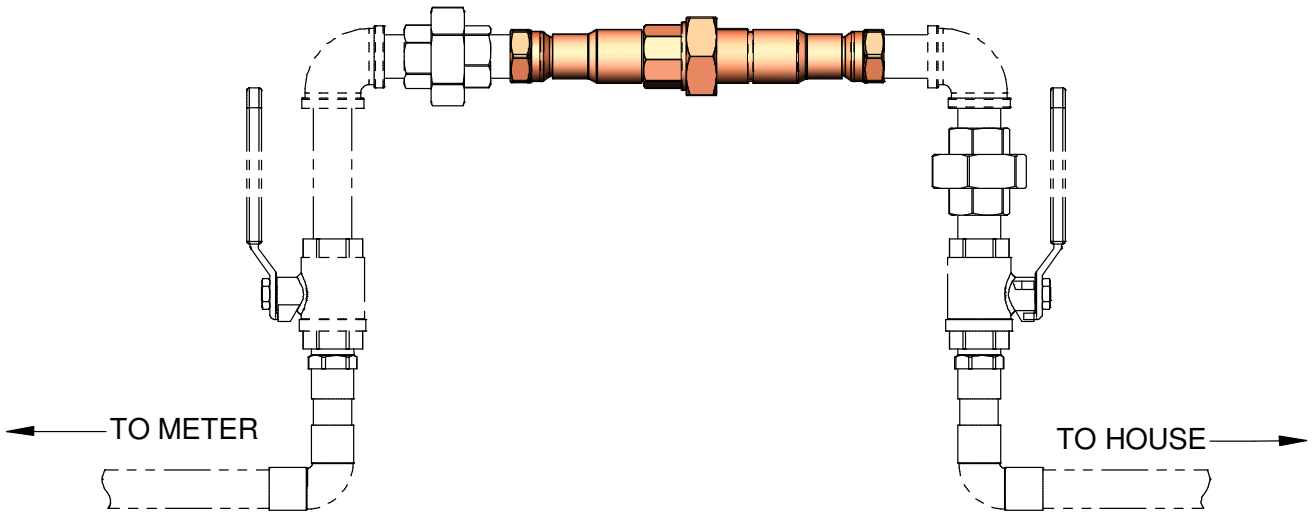

ALTERNATE INSTALLATION FOR EASE OF SERVICING

SERVICING

Note that typical FRE-FLO™ servicing/maintenance is done annually.

See Figure 2

1. Turn water shut-off valves to off.
2. Replace the FRE-FLO™ unit with the service section.
3. Turn on shut-off valves. This allows the advantage of continued water supply to your home while servicing the FRE-FLO™.
4. Disassemble the FRE-FLO™ unit, and remove core from the permanent FRE-FLO™ outer housing. When removing the FRE-FLO™ core, use caution not to drop the core, as the metals are brittle and can fracture. Simply place the permanent FRE-FLO™ outer housing in a safe place while the service section temporarily takes the place of the FRE-FLO™. Exchange the FRE-FLO™ core at the authorized FRE-FLO™ service center where you purchased the FRE-FLO™ unit (in order to receive a discount on your new annual FRE-FLO™ core).
5. Reassemble the FRE-FLO™ by easily placing the new core into the FRE-FLO™ outer housing. Be sure O-ring is placed and seated properly. Simply use a light layer of silicone lubricant on the O-ring once a year during the annual servicing (in order to keep the O-ring lubricated and functioning well). Turn water shut-off valves to off. Replace the service section with the FRE-FLO™.
6. Now turn the water shut-off valves to on very slowly, to allow air to escape. Wait 30 seconds or until all the air has exited the piping system and then open the water supply valve all the way and let the water run for a few minutes. Your conditioned water again flows freely. You have now completed the servicing of the FRE-FLO™ Whole Home Scale Prevention Unit.

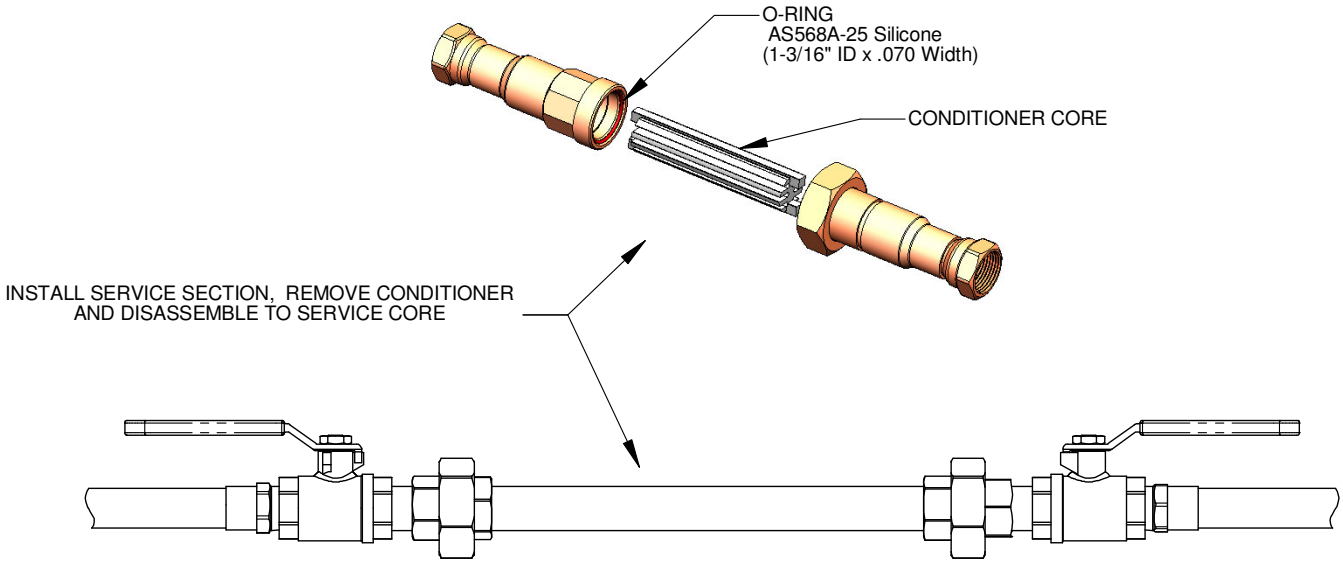

Figure 2

Please note this BOM may not fit all installations. Consult with your licensed and bonded plumber, or contractor.

Suggested Bill of Material (BOM) to install you new FRE-FLO™ Whole Home Scale Prevention unit.

- 2 each ball valves (sweat x thread)
- 4 each threaded close male nipples
- 2 each threaded ¾" unions
- 1 each ¾" sweat union
- 2 each adapter (sweat x thread)
- 1 each roll of Teflon tape